本公司智慧财产未经许可不得复制
ming biao copyright,may not be used without permission from ming biao.

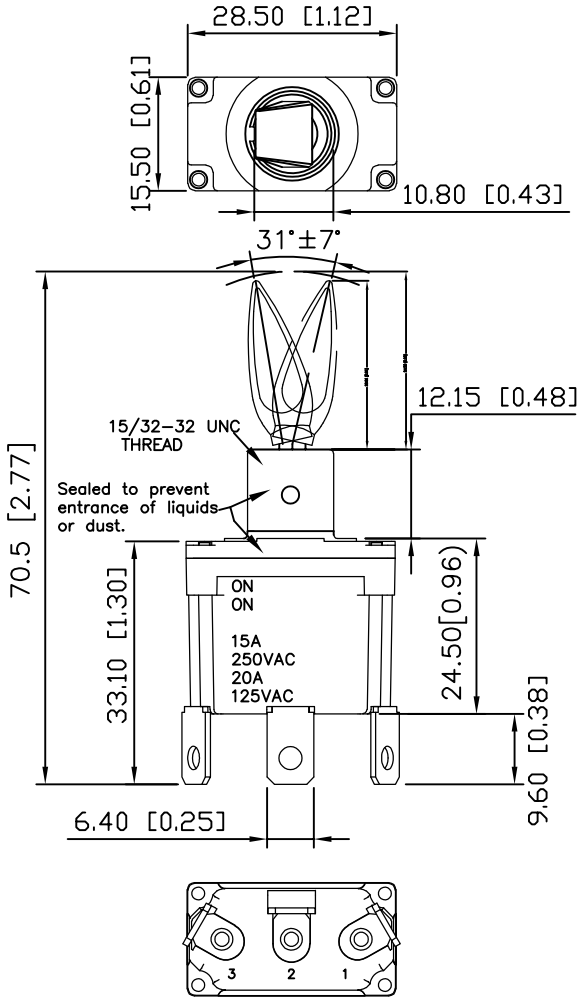

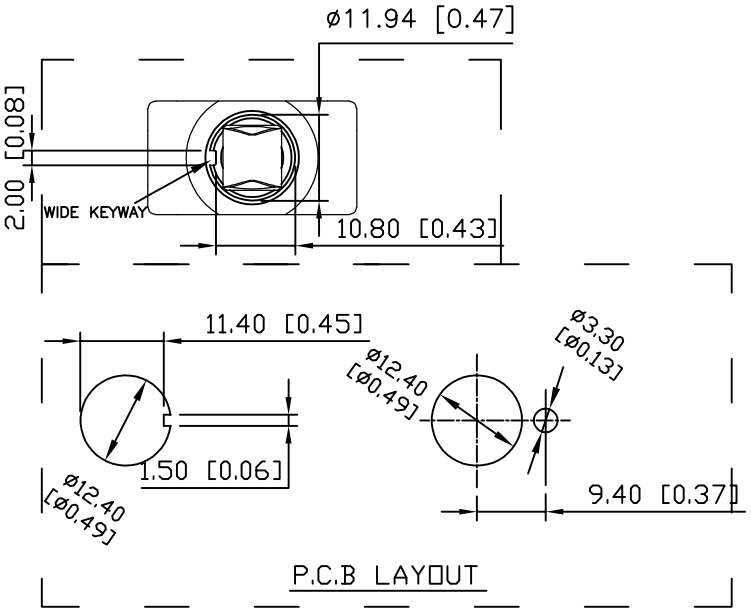

SPECIFICATIONS:
1.CONTACT RESISTANCE: 20mΩ.(Max)
2.INSULATION RESISTANCE: 100VDC-100MΩ.(Min)
3.DIELECTRIC STRENGTH: 1500VAC-1MINUTE.
4.MECHANICAL LIFE CYCLE: 100,000 CYCLES.
5.OPERATING TEMPERATURE: −40 TO +85°C.
6.FRONT SEAL: IP 68.

RATING:
1.RESISTIVE LOAD: 10A 125/250VAC, 15A 28VDC. 2.INDUCTIVE LOAD: 15A 28VDC.

Model	Switching Position 1-2 COM.	Switching Position 1-2 COM.	Switching Position 1-2 COM.	Schematic
SG1	ON	NONE	ON	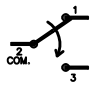 (SG1,SG3,SG4,SG5)
SG2	OFF	NONE	(ON)	
SG3	ON	OFF	ON	
SG4	(ON)	OFF	(ON)	
SG5	(ON)	OFF	ON	
SG9	OFF	NA	ON	(SG2,SG9)
Term. Comm.	2−1	OPEN	2−3	

NO	PART NAME	MATERIAL	Q'TY	FINISHING
1	ACTUATOR	COPPER ALLOY	1	Cr PLATED
2	HOUSING	NYLON (UL94V−0)	1	
3	BUSHING	ZINC ALLOY	1	
4	TERMINAL	COPPER ALLOY	3	Ag PLATED
5	CONTACT	COPPER ALLOY	1	Ag PLATED
6	O-RING	SILICONE RUBBER	1	
7	SHEEL	STAINLESS STELL	1	Ni PLATED

MING BIAO 铭标 2024.09.15 ISSUED R&D DEPT

RoHS COMPLIANT · Pb Pb-Free · HF Halogen Free

东莞市铭标电子科技有限公司
Ming Biao Electronic Technology Co. ,Ltd.

TOLERANCE UNLESS OTHERWISE STATED			
X.X	±0.20	SIZE	A4
X.XX	±0.15	REV	A
X.XXX	±0.10	UNIT	mm
∠	±2°	SCALE	1:1

DESIGN	DATE 2024. 09. 15	TITLE	Toggle Switches
CHKD	DATE	MODEL	HT-SG1B3T1T23
APPD	DATE	SHEET	1/2
		PRINT DATE	2025.02.11